REVISION HISTORY				
REV	DESCRIPTION	DESIGNER	CREATION DAT	CHECKED BY
1	INITIAL RELEASE	M.M.	6/04/2017	

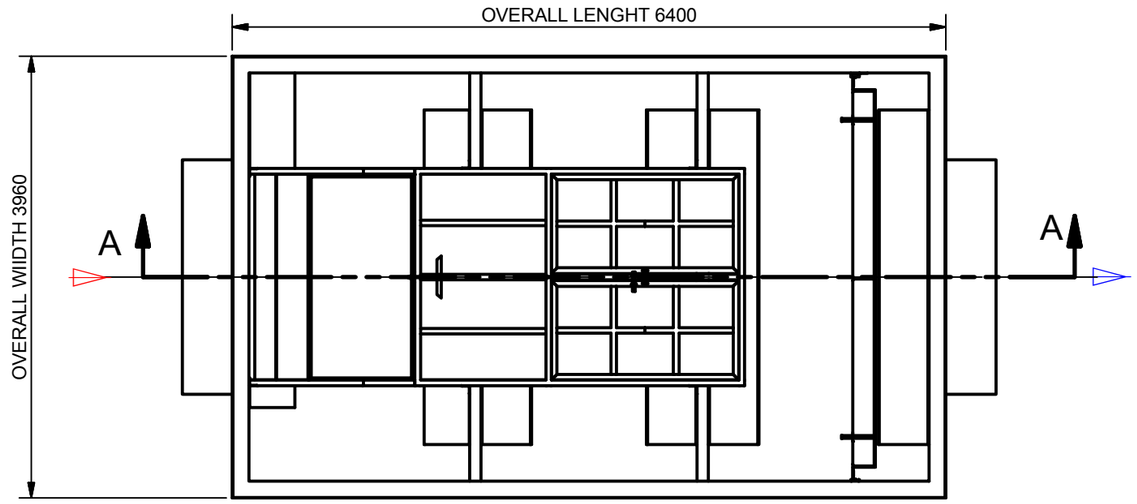

PLAN VIEW
COVER & LID REMOVED FOR CLARITY

APPROVED.....
NAME.....
SIGNED.....
DATE...../...../.....

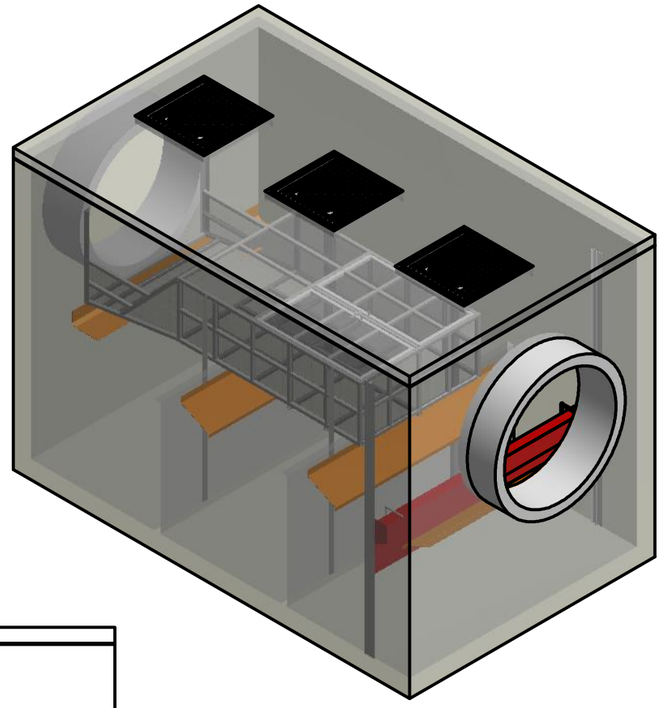

ISOMETRIC VIEW

3 OFF 900 X 900MANHOLES
ACCESS COVERED HEAVY DUTY
COVER CLASS "D"

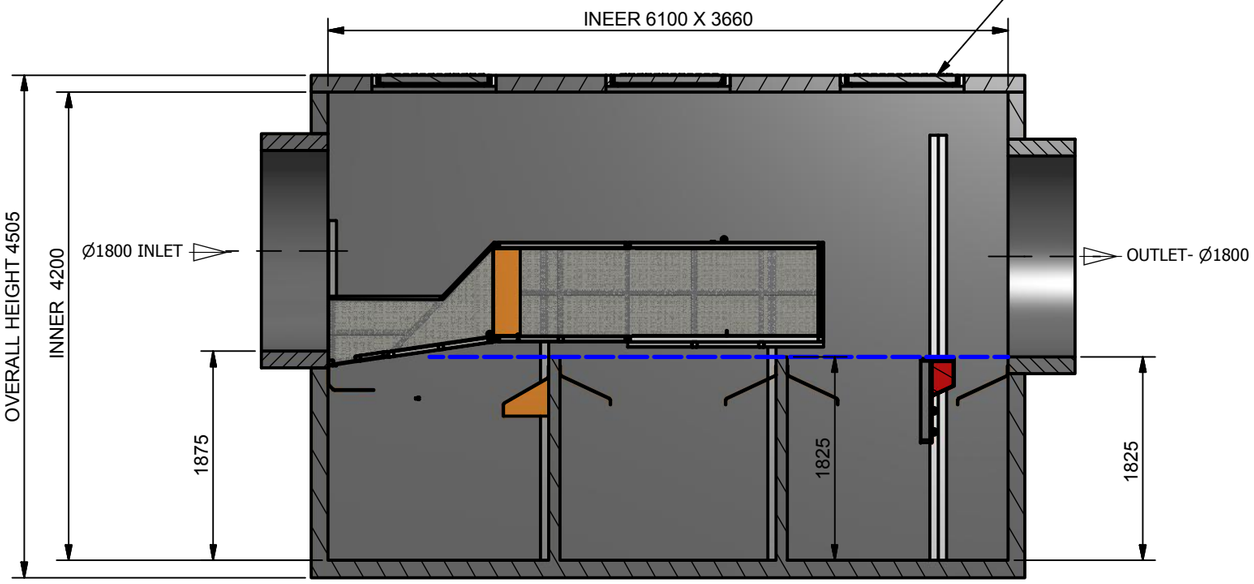

SECTION A-A

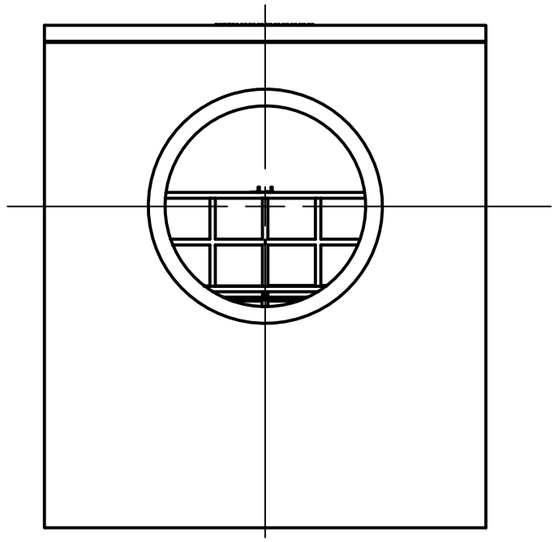

SIDE VIEW

Site Level Confirmation	
Finished Surface Level (FSL)	RL:
Access Cover Thickness	mm
Inlet Invert Level	RL:
Outlet Invert Level	RL:
Company:	
Name:	
Date:	

ISSUED FOR CONSTRUCTION

D:\PACK AND GO - 12-20\SP17- BB31240-P.idw

TOLERANCE: ALL DIMENSIONS 10mm UNLESS OTHERWISE STATED.

CLIENT:

DISTRIBUTOR :

CONFIDENTIAL - The drawings must not be disclosed to any third parties without written permission from SPEL Environmental Sydney. Unauthorised disclosure may result in prosecution.
© SPEL Environmental - This drawing is the property of SPEL Environmental ABN: 83 151 832 629 and is subject to return on demand. It is submitted for the use only in connection with the proposal and contracts of SPEL Environmental with the expressed conditions that it is not to be reproduced or copied in any form. This data must only be used in accordance with our standard terms and conditions.
© Copyright
SPEL Environmental accepts no responsibility for any loss or damage resulting from any person acting on this information.
The details and dimensions contained in this document may change, please check with SPEL Environmental for confirmation of current specifications.

Drawn	M.M.	Date 6/04/2017
Check		Date
Verified		Date
Approved		Date
Request No.	RN2910	

SPEL ENVIRONMENTAL
INTEGRATED WATER SOLUTIONS
100 Silverwater Road Silverwater NSW 2128
PH: 1300 773 500 | E: sales@spel.com.au
www.spel.com.au

PROJECT :

TITLE SPEL BAFFLE BOX
SBB-12-20-1800-3540
CONSTRUCTION DRAWING

SCALE	SIZE	SHEET	REV
N.T.S	A3	1	1

CUSTOMER CODE :

DWG No. SP17- BB31240-P